DELABIE

TEMPOFIX 3 frame system for urinals



Ref. 543000D-430030

Electronic flush valve mains supply - For urinals with ½" flexible

DESCRIPTION

TEMPOFIX 3 frame system for urinals - Ref.543000D-430030

Frame system with electronic urinal valve:
Black powder-coated steel frame for wall-mounted installation.
Fixes to floor and load-bearing walls, anchoring bolts supplied.
Adjustable bracket 95 - 280mm.
Frame height can be adjusted 0 - 200mm.
Ø 50mm soil pipe with waterproof seal.
Delivered pre-mounted.
Compatible with solid wall finishes from 13 - 120mm.
10-year warranty.

Fitted with TEMPOMATIC 4 F½" electronic valve:
230/6V mains supply (cable and transformer are supplied).
Shock-resistant black glass vitro-ceramic wall plate 145 x 145mm with integrated electronics.
Shock-resistant infrared presence detection sensor.
Waterproof recessing housing.
Detection delay is 10 seconds.
3 programmes (rinsing volume can be set according to urinal type).
High frequency mode (exclusive to DELABIE).
Hygienic duty flush every 24 hours (can be adjusted to every 12 hours or OFF) after last use: prevents vacuums.
Flow rate pre-set at 0.15 L/sec. at 3 bar, can be adjusted.
Connection with ½" brass connection (for urinal valves with flexible supply).

Technical features: see TEMPOMATIC 4 urinal ref. 430SBOX-430030.

Kit contents:
(543000D): frame system, tube with brass union ½" for flexible supply, soil pipe sleeve Ø 50mm, recessed housing with cover, valve configured for system flush, connection accessories.
(430030): control plate, transformer, collar for waterproofing, valve, solenoid valve, filter and stopcock.

ADVANTAGES

- Total hygiene: no manual contact
- 3 rinsing programmes and high frequency mode
- Quick and easy to install: delivered pre-mounted
- Hygienic duty flush

© Delabie

DELABIE

TECHNICAL CHARACTERISTICS

TEMPOFIX 3 frame system for urinals - Ref.543000D-430030

Technology	Electronic
Inaltime	985 - 1385 mm
Conector	1/2"
Finisaj	Black glass
Supply	230/6V mains supply
Width	430 mm
Depth	160 - 220 mm

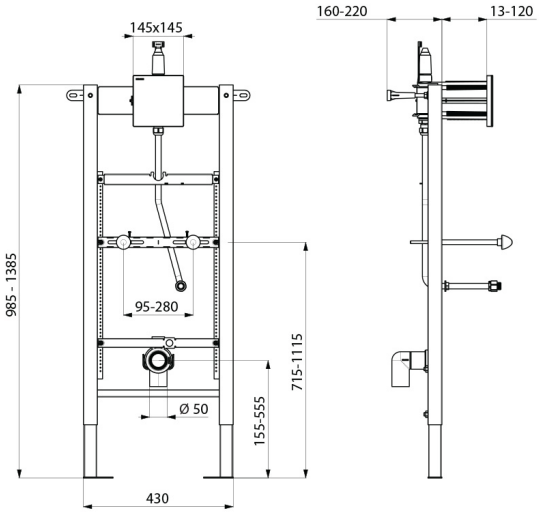

© Delabie