DELABIE

SPORTING MIX 2 SECURITHERM shower panel



Ref. 714910

Electronic mains supply, thermostatic, scale-resistant nozzle

DESCRIPTION

SPORTING MIX 2 SECURITHERM shower panel - Ref.714910

Thermostatic electronic shower panel:
Anodised aluminium and chrome-plated satin finish panel.
Mains supply 230/6V.
Infrared presence detection. Shower starts when hand is moved towards the sensor (detection distance ~4cm).
Shuts off voluntarily or automatically after ~60 seconds.
Duty flush (~60 seconds every 24 hours after the last use).
Flow rate 6 lpm at 3 bar.
Tamperproof, scale-resistant fixed shower head with automatic flow rate regulation.
Adjustable spray.
Accessible filters and non-return valves.
Integrated stopcocks.
M½" recessed connections.
Suitable for people with reduced mobility.
10-year warranty.

SECURITHERM technology:
Thermostatic mixer directly integrated in the head of the shower panel.
Temperature pre-set by the installer.
Stable temperature.
Anti-scalding failsafe: automatic shut-off if the cold water fails.
Anti-cold showers function: automatic shut-off if the hot water fails.

ADVANTAGES

- 80% water savings
- Anti-bacterial proliferation duty flush
- Immediate shut-off if cold water fails
- Sleek shapes, concealed fixings

TECHNICAL CHARACTERISTICS

SPORTING MIX 2 SECURITHERM shower panel - Ref.714910

Technology	Electronic
Inaltime	1020 mm
Debit	6 lpm
Conector	M1/2"
Finisaj	Aluminium
Supply	Mains supply 230/6V
Width	70 mm
Depth	21 mm

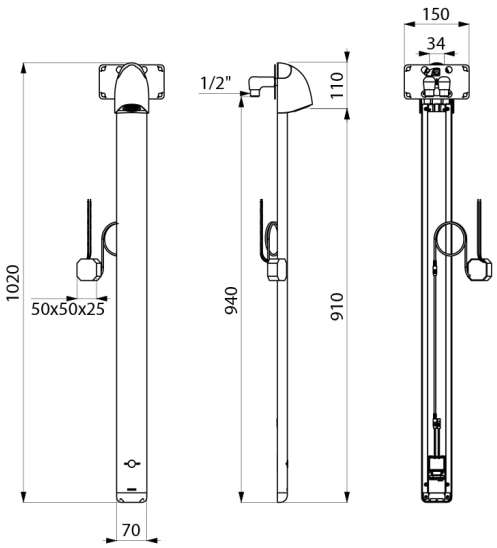

© Delabie