DELABIE

Mechanical mixer for sinks or troughs

Ref. 2510T

Swivelling spout H. 155mm L. 230mm



DESCRIPTION

Mechanical mixer for sinks or troughs - Ref.2510T

Mechanical sink and trough mixer with swivelling spout H. 155mm L. 230mm with hygienic flow straightener.
Ø 40mm ceramic cartridge.
Pre-set maximum temperature limiter.
Body and spout with smooth interiors.
Flow rate limited to 9 lpm at 3 bar.
Solid control lever.
Supplied with PEX flexibles F3/8".
Reinforced fixing.
10-year warranty.

ADVANTAGES

TECHNICAL CHARACTERISTICS

Mechanical mixer for sinks or troughs - Ref.2510T

Inaltime	177 mm
Debit	9 lpm
Conector	F3/8"
Finisaj	Chrome-plated brass
Drop Height	155 mm
Spout Length	230 mm

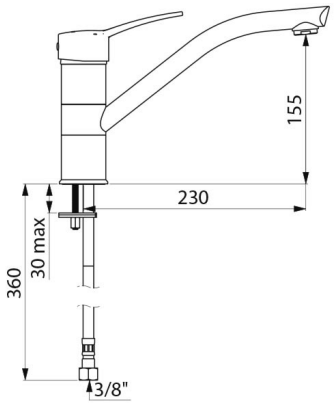

© Delabie