DELABIE

Tap for sinks

Ref. D275150

Spout L.150mm



DESCRIPTION

Tap for sinks - Ref.D275150

Wall-mounted tap for sinks with Long-Life valve head.
DELTA chrome-plated control knob.
Swivelling spout.
Scale-resistant flow straightener, flow rate regulated to 3 lpm.
Chrome-plated brass body.
M1/2".
Spout L. 150mm.
10-year warranty.

ADVANTAGES

Long-life valve head

TECHNICAL CHARACTERISTICS

Tap for sinks - Ref.D275150

Lungime	150 mm
Conector	M1/2"

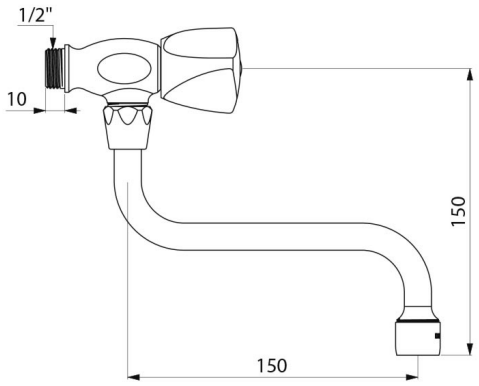

© Delabie