DELABIE

DOC M curtain rail

Ref. 4337W

White powder-coated

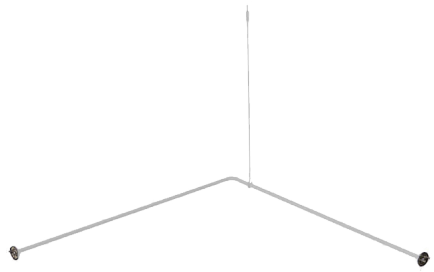

DESCRIPTION

DOC M curtain rail - Ref.4337W

Angled curtain rail for DOC M pack.
White powder-coated connecting tubes. Dimensions: ¯ 20m, length 1200mm.
Concealed fixings.
Pack of two blue powder-coated plates ¯ 20mm for tube.
With push-fit connectors for mounting. Supplied with 4 screws 4 x 30 and 4 rawl plugs.
304 stainless steel elbow connector 150 x 150mm.
ECO ceiling support L. 0.80m.
White powder-coated finish for rod.
Can be cut to size.

ADVANTAGES

- Easy to fill
- Comfort: retracting hand spray with 2 jets

TECHNICAL CHARACTERISTICS

DOC M curtain rail - Ref.4337W

Inaltime	821mm
Lungime	1200mm
Finisaj	White powder-coated
Width	1200mm

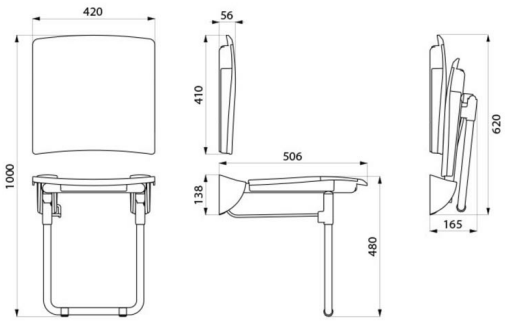

© Delabie