DELABIE

Be-Line drop-down support rail, L. 650mm, white



Ref. 511960W

Powder-coated matte white

DESCRIPTION

Be-Line drop-down support rail, L. 650mm, white - Ref.511960W

Be-Line¨ drop-down support rail for people with reduced mobility.
In the lowered position use as a grab bar, as a support for standing and for assisting movement, for WCs or showers.
Allows side access in the raised position.
Removable: easy to remove with anti-theft locking system. Reduces the number of grab bars in a facility, allowing installation only when required.
Example: hotels or hospitals providing short-term accommodation for disabled people.
Drop-down rail with slowed down descent. Retained in upright position.
Aluminium tube.
Rounded profile ¯ 42mm with ergonomic flat front face that prevents rotation for an optimal grip.
Matte white powder-coated aluminium finish provides a good visual contrast with dark walls.
Uniform surface for easy maintenance and hygiene.
Concealed fixings secured to wall by a 304 stainless steel plate, 5mm thick.
Supplied with stainless steel screws ¯ 8 x 70mm for concrete walls.
Dimensions: 650 x 210 x 120mm.
Tested to over 200kg. Maximum recommended user weight: 135kg.
Drop-down rail with 10-year warranty.
CE marked.

ADVANTAGES

- Innovative design suitable for all users
- Removable: easy to unclip
- Comfort: ergonomic flat face prevents rotation
- Tested to over 200kg

© Delabie

TECHNICAL CHARACTERISTICS

Be-Line drop-down support rail, L. 650mm, white - Ref.511960W

Inaltime	210mm, 720mm when raised
Lungime	650mm
Finisaj	Matte white powder-coated aluminium
Width	120mm
Diameter	Ø 42mm
Destination	For WCs
Destination	For WCs For showers

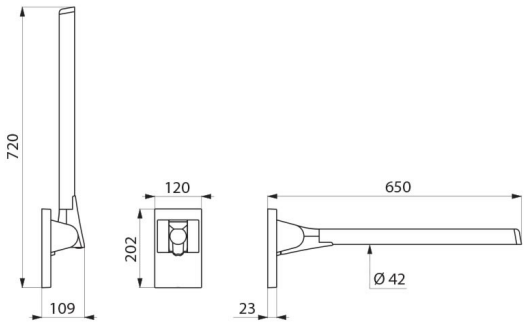

© Delabie