DELABIE

DOC M straight grab bar

Ref. 511330W

White powder-coated aluminium



DESCRIPTION

DOC M straight grab bar - Ref.511330W

DOC M straight grab bar, ¯ 35mm, centre-to-centre 300mm.
White powder-coated aluminium tube.
Concealed fixings secured to wall by 3-hole wall plate.
Tested to over 200kg. Maximum recommended user weight: 135kg.
10-year warranty.
CE marked.
DOC M compliant.

ADVANTAGES

Tamperproof stainless steel grid

Comfort: ergonomic anti-rotation surface

TECHNICAL CHARACTERISTICS

DOC M straight grab bar - Ref.511330W

Lungime	300mm
Finisaj	White powder-coated aluminium
Width to the wall	60mm

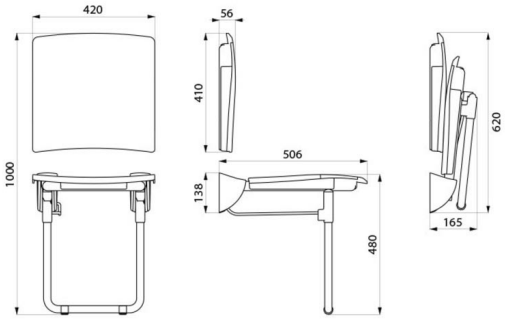

© Delabie