DELABIE

SECURITHERM EP pressure-balancing basin mixer



Ref. 2564T5EP

Single hole, single control tall mixer with EP cartridge

DESCRIPTION

SECURITHERM EP pressure-balancing basin mixer - Ref.2564T5EP

Deck-mounted SECURITHERM tall basin mixer with pressure-balancing .
Mixer ideal for healthcare facilities, retirement and care homes, hospitals and clinics.
Single hole, single control mixer with swivelling spout H. 205mm L. 170mm.
Tall mixer with BIOSAFE hygienic outlet suitable for fitting a BIOFIL terminal filter.
Total anti-scalding safety: HW flow reduces if CW supply fails (and vice versa).
Ø 35mm ceramic cartridge with pressure balancing with pre-set maximum temperature limiter.
Body and spout with smooth interiors (reduces bacterial development).
Thermal shocks are possible without removing the control lever or shutting off the cold water.
Flow rate limited to 5 lpm at 3 bar.
Hygiene control lever L. 185mm requires no manual contact.
PEX flexibles F3/8" with filters and non-return valves.
Reinforced fixings by 2 stainless steel rods and back-nuts.
Mixer suitable for people with reduced mobility.
10-year warranty.

ADVANTAGES

TECHNICAL CHARACTERISTICS

SECURITHERM EP pressure-balancing basin mixer - Ref.2564T5EP

Technology	SECURITHERM EP
Debit	5 lpm
Conector	F3/8"
Finisaj	Chrome-plated brass
Drop Height	205 mm
Spout Length	170 mm

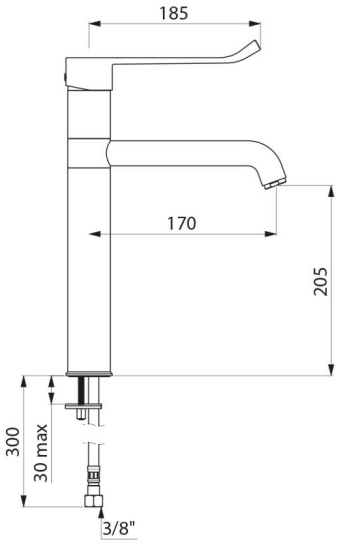

© Delabie