DELABIE

Wall-mounted MINERALCAST wash trough



Ref. 454180

MINERALCAST - 3 services - L. 1800mm

DESCRIPTION

Wall-mounted MINERALCAST wash trough - Ref.454180

Wall-mounted wash trough for wall-mounting, for 3 services.
MINERALCAST: composite material consisting of natural minerals and polyester resin.
Ideal for use in public and commercial places.
Uniform, non-porous surface is easy to clean.
One-piece cast washbasin, seam-free, for easy maintenance and better hygiene.
Pleasant to the touch.
Without tap hole.
Supplied with 1½" waste. Without overflow.
Supplied with fixing elements.
White, RAL 9016.
Weight: 90kg.
10-year warranty.

ADVANTAGES

MINERALCAST: uniform, non-porous surface

TECHNICAL CHARACTERISTICS

Wall-mounted MINERALCAST wash trough - Ref.454180

Inaltime	148 mm
Lungime	1800 mm
Finisaj	Mineralcast
Width	570 mm

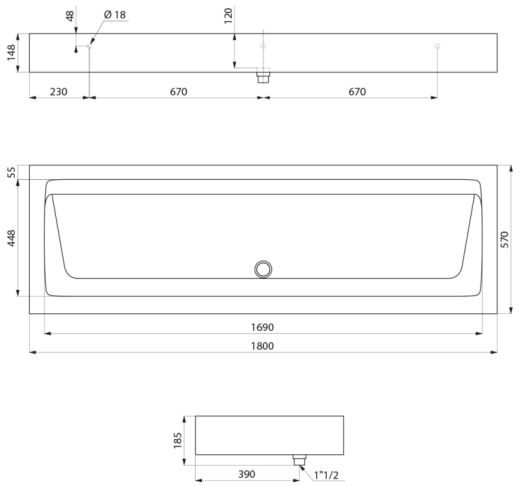

© Delabie