DELABIE

TEMPOFIX 3 frame system for urinals

Ref. 543100

Electronic urinal valve with mains supply



DESCRIPTION

TEMPOFIX 3 frame system for urinals - Ref.543100

Frame system with electronic urinal valve:
Black powder-coated steel frame for wall-mounted installation.
Fixes to floor and load-bearing walls, anchoring bolts supplied.
Adjustable bracket 100 - 280mm.
Frame height can be can be adjusted 0 - 200mm.
Ø 50mm soil pipe with waterproof seal.
Delivered pre-mounted.
Compatible with solid wall finishes from 40 - 190mm.
10-year warranty.

Fitted with a TEMPOMATIC M½" electronic urinal valve:
Mains supply, 12V electronic control unit with solenoid valve, filter and stopcock.
Shock-resistant infrared presence detection sensor.
Detection distance, time flow and flow rate can be adjusted during installation.
Install a 230/12V transformer.
Detection delay is 3 seconds.
Automatic pre-rinse is possible.
Time flow pre-set at 3 seconds, can be adjusted from 3 - 12 seconds.
Hygienic duty flush every 24 hours after the last use: prevents vacuums.
Flow rate 0.3 L/sec. at 3 bar, can be adjusted.
Wall plate is flush to the wall.
Threaded rods can be cut to size.

Technical features: see TEMPOMATIC urinal valve ref. 428200.

ADVANTAGES

- Total hygiene: no manual contact
- ECO time flow set at 3 seconds
- Cross wall installation
- Hygienic duty flush

© Delabie

TECHNICAL CHARACTERISTICS

TEMPOFIX 3 frame system for urinals - Ref.543100

Technology	Electronic
Height	985 - 1385 mm
Connector	1/2"
Supply	Mains supply 230/12V
Width	430 mm
Depth	160 - 220 mm

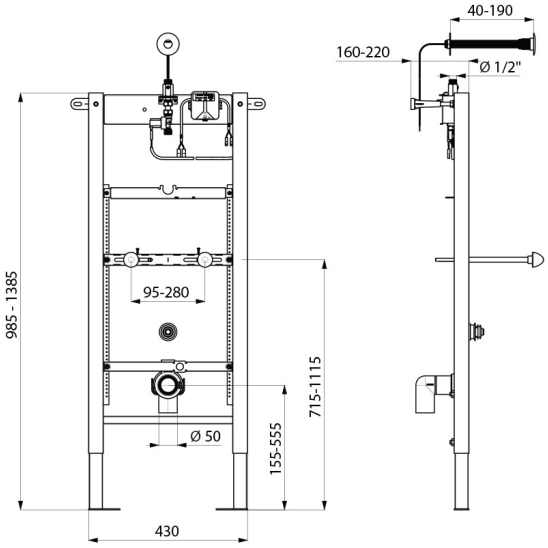

© Delabie