DELABIE

TEMPOFIX 3 frame system for urinals

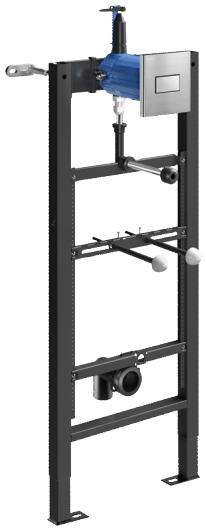

Ref. 543006-778700

Time flow flush valve - For urinals Ø 35mm

DESCRIPTION

TEMPOFIX 3 frame system for urinals - Ref.543006-778700

Frame system with time flow urinal valve:
Black powder-coated steel frame for wall mounted installation.
Fixes to floor and load-bearing walls, anchoring bolts supplied.
Adjustable bracket 95 - 280mm.
Frame height can be adjusted 0 - 200mm.
Ø 50mm soil pipe with waterproof seal.
Delivered pre-mounted.
Compatible with solid wall finishes from 13 - 120mm.
10-year warranty.

Fitted with a TEMPOFLUX F½" time flow flush valve:
Satin finish stainless steel wall plate 145 x 145mm.
Chrome-plated metal button.
Waterproof recessing housing.
Soft-touch operation.
Time flow pre-set at ~3 seconds.
Flow rate pre-set at 0.15 L/sec. at 3 bar, can be adjusted to 0.3 L/sec.
Complies with European standard EN 12541 (class II acoustic level).
Connection with Ø 35mm connection washer (for standard urinals).

Technical features: see TEMPOFLUX urinal ref. 778BOX-778700.

Kit contents:
(543006): frame system, tube with connection washer Ø 35mm, soil pipe sleeve Ø 50mm, recessed housing with cover, valve configured for system flush and connection accessories.
(778700): control plate, collar for waterproofing, valve, time flow cartridge, filter and stopcock.

ADVANTAGES

- Quick and easy to install: delivered pre-mounted
- Soft-touch operation
- ECO time flow set 3 seconds
- Install behind wall, on frame system

© Delabie

TECHNICAL CHARACTERISTICS

TEMPOFIX 3 frame system for urinals - Ref.543006-778700

Technology	Time flow
Height	985 - 1385 mm
Connector	1/2"
Finish	Satin finish stainless steel
Width	430 mm
Depth	160 - 220 mm

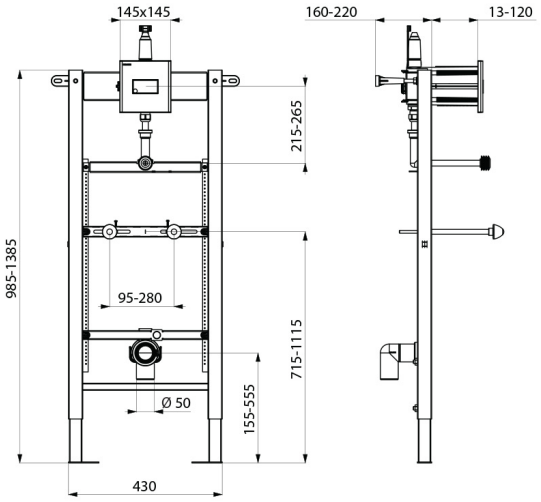

© Delabie