DELABIE

TEMPOSOFT 2 shower valve

Ref. 749428

Time flow



DESCRIPTION

TEMPOSOFT 2 shower valve - Ref.749428

Time flow recessed shower valve:
TEMPOSOFT 2 M1/2" time flow valve for mixed water supply.
For recessed installation.
Bright polished 304 stainless steel wall plate Ø130mm.
Recessing depth can be adjusted from 1 to 5mm
Soft-touch operation.
Time flow ~30 seconds.
Flow rate pre-set at 6 lpm at 3 bar can be adjusted.
Solid brass body.This model does not have a waterproof recessing box.
The installer must ensure that the recessing area is waterproof and any leaks or condensates can drain away (see installation guide).
Suitable for people with reduced mobility.
10-year warranty.

ADVANTAGES

Soft-touch operation

System tested to over 500,000 operations

TECHNICAL CHARACTERISTICS

TEMPOSOFT 2 shower valve - Ref.749428

Technology	Time flow
Height	70 mm
Flow rate	9 lpm
Connector	1/2"

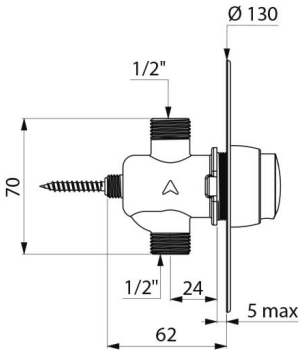

© Delabie