DELABIE

# Deck-mounted single hole mixer - 20 lpm



Ref. 2506T3

Swivelling tubular over spout L. 300mm H. 315mm

## DESCRIPTION

**Deck-mounted single hole mixer - 20 lpm** - **Ref.2506T3**

Deck-mounted single hole mixer with swivelling, tubular spout H. 315mm L. 300mm.
Star-shaped flow straightener.
Ceramic cartridge Ø 35mm.
Flow rate 20 lpm at 3 bar.
Spout with smooth interior.
Slimline control lever.
Chrome-plated body and spout with reinforced fixing via two stainless steel rods and back-nuts.
Without pop-up waste.
Supplied with stainless steel braided PEX flexibles F3/8".
10-year warranty.

## ADVANTAGES

- Chrome-plated body
- Flow rate 20 lpm
- Body/spout with smooth interior reduces bacteria

## TECHNICAL CHARACTERISTICS

**Deck-mounted single hole mixer - 20 lpm** - **Ref.2506T3**

| | |
|---|---|
| Height | 380 mm |
| Flow rate | 20 lpm |
| Connector | F3/8" |
| Finish | Chrome-plated brass |
| Drop Height | 315 mm |
| Spout Length | 300 mm |

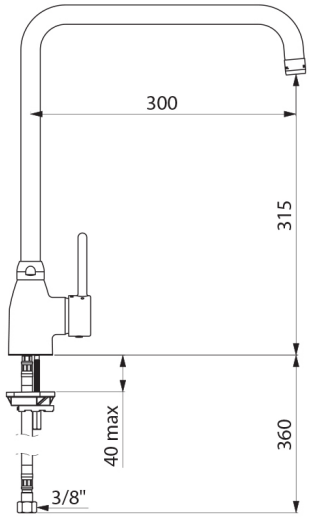


© Delabie