DELABIE

Deck-mounted single hole mixer - 45 lpm

Ref. 5640T3

Swivelling over spout L. 300mm H. 190mm



DESCRIPTION

Deck-mounted single hole mixer - 45 lpm - Ref.5640T3

Deck-mounted single hole mixer with swivelling, tubular spout Ø 22mm H. 190mm L. 300mm.
Star-shaped flow straightener.
Water-free, guided valve heads with reinforced mechanisms.
Shock-resistant, ergonomic ball levers.
Flow rate 45 lpm at 3 bar.
Full flow rate achieved within first 90°.
Spout with smooth interior.
Chrome-plated brass body and spout.
Reinforced fixings via two stainless steel rods.
F3/8" PEX flexibles.
10-year warranty.

ADVANTAGES

- Rapid fill: flow rate 45 lpm
- Shockproof control levers withstand intensive use
- Chromed brass body and spout, reinforced fixings
- Spout with smooth interior

TECHNICAL CHARACTERISTICS

Deck-mounted single hole mixer - 45 lpm - Ref.5640T3

Height	270 mm
Flow rate	45 lpm
Connector	F3/8"
Finish	Chrome-plated brass
Drop Height	190 mm
Spout Length	300 mm

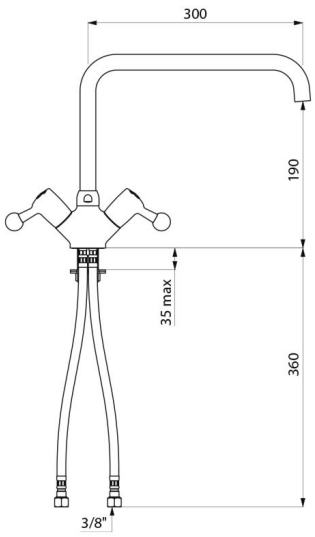

© Delabie