DELABIE

Wall-mounted paper towel dispenser, for 500 sheets

Ref. 510601S

For folded paper towels



DESCRIPTION

Wall-mounted paper towel dispenser, for 500 sheets - Ref.510601S

Wall-mounted paper towel dispenser.
Bacteriostatic polished satin 304 stainless steel.
Dispenses one sheet at a time, suitable for most paper towels.
With lock and standard DELABIE key.
Level control.
Capacity: 500 sheets.
Dimensions: 120 x 275 x 360mm.
Pack of interleaved paper towels can be ordered separately (ref. 6606).
10-year warranty.

ADVANTAGES

- One sheet at a time: for all paper towels
- 304 stainless steel: reduces bacterial development
- Easy to maintain: standard DELABIE key
- Smooth surface, easy to clean

TECHNICAL CHARACTERISTICS

Wall-mounted paper towel dispenser, for 500 sheets - Ref.510601S

Height	360mm
Finish	Polished satin 304 stainless steel
Width	275mm
Depth	120mm

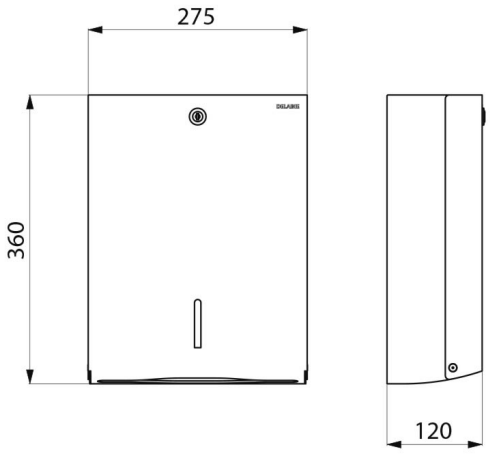

© Delabie