DELABIE

# Wall-mounted liquid soap dispenser, 1 litre

Ref. 6580

Rectangular



## DESCRIPTION

**Wall-mounted liquid soap dispenser, 1 litre - Ref.6580**

Wall-mounted rectangular liquid soap dispenser.
Vandal-resistant model with lock and standard DELABIE key.
No waste, non-drip (waterproof) pump dispenser.
Bright polished 304 stainless steel finish.
Stainless steel thickness: 1mm.
Capacity: 1 litre.
Dimensions: 108 x 108 x 230mm.
Wall-mounted soap dispenser with a 10-year warranty.

## ADVANTAGES

- Vandal-resistant: lock, no waste pump
- Bacteriostatic 304 stainless steel
- Easy to maintain: standard DELABIE key

## TECHNICAL CHARACTERISTICS

**Wall-mounted liquid soap dispenser, 1 litre - Ref.6580**

| | |
|---|---|
| Height | 230mm |
| Finish | 304 stainless steel, bright polished |
| Width | 108mm |
| Depth | 108mm |
| Thickness | 1mm |
| Operation | Push-button |

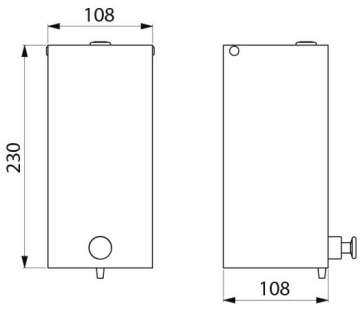


© Delabie