DELABIE

Electronic liquid or foam soap dispenser

Ref. 512121P

BINOPTIC electronic soap dispenser



DESCRIPTION

Electronic liquid or foam soap dispenser - Ref.512121P

Deck-mounted electronic soap dispenser.
Liquid or foam soap dispenser.
No manual contact: hands are automatically detected by infrared cell.
Spout made from chrome-plated 304 stainless steel.
No waste pump dispenser.
Separate electronic unit and removable tank for installation under the basin.
Automatic soap dispenser: mains supply with 230/6V transformer.
For vegetable-based liquid soap with a maximum viscosity of 3,000 mPa.s or specialist foam soap.
Spout length: 105mm.
Supplied with a flexible tube 1.20m long for remote tanks.
10-year warranty.
CE marked.

ADVANTAGES

- Total hygene: no manual contact
- Comfort: automatic soap dispenser
- No waste pump dispenser
- Liquid or foam soap

TECHNICAL CHARACTERISTICS

Electronic liquid or foam soap dispenser - Ref.512121P

Technology	Infrared sensor
Length	Tube
Finish	Chrome-plated 304 stainless steel
Supply	Mains supply 230/6V
Drop Height	58mm
Spout Length	105mm
Operation	Electronic

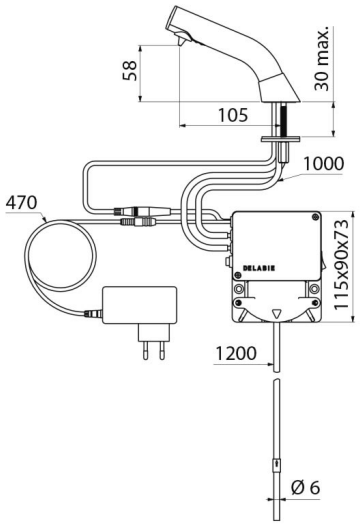

© Delabie