DELABIE

Electronic, liquid or foam soap dispenser, wall-mounted



Ref. 512151P

Liquid or foam soap dispenser

DESCRIPTION

Electronic, liquid or foam soap dispenser, wall-mounted - Ref.512151P

Wall-mounted electronic soap dispenser.
Liquid or foam soap dispenser.
No manual contact: infrared cell detects hands automatically.
Chrome-plated 304 stainless steel spout.
No waste dose dispenser.
Independent electronic unit for installation beneath the washbasin.
Automatic soap dispenser: mains supply with 230/6V transformer.
For vegetable-based liquid soap with maximum viscosity of 3,000 mPa.s or specific foam soap.
Total spout length: 115mm.
Supplied with 1.20m flexible tube for remote tanks.
Wall-mounted electronic soap dispenser with 10-year warranty.
CE marked.

ADVANTAGES

- Total hygene: no manual contact
- Comfort: automatic soap dispenser
- No waste pump dispenser
- Liquid or foam soap

TECHNICAL CHARACTERISTICS

Electronic, liquid or foam soap dispenser, wall-mounted - Ref.512151P

Technology	Infrared detection
Height	115mm (electronic unit)
Length	115mm
Finish	Chrome-plated 304 stainless steel
Supply	Mains supply 230/6V
Spout Length	98mm

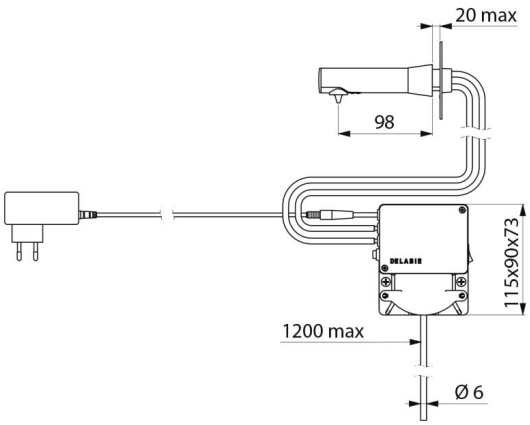

© Delabie