DELABIE

Deck-mounted electronic liquid or foam soap dispenser



Ref. 512531PUK

TEMPOMATIC 4 electronic soap dispenser

DESCRIPTION

Deck-mounted electronic liquid or foam soap dispenser -

Ref.512531PUK

Deck-mounted electronic soap dispenser.
Liquid soap, foam soap or hydroalcoholic gel dispenser.
No manual contact: hands are automatically detected by infrared cell.
Spout made from chrome-plated 304 stainless steel.
No waste pump dispenser.
Separate electronic unit and removable tank for installation under the basin.
Automatic soap dispenser: mains supply with 230/6V transformer.
For vegetable-based liquid soap with a maximum viscosity of 3,000 mPa.s or specialist foam soap.
Compatible with hydroalcoholic gel.
Spout length: 111mm.
Supplied with a 0.5 litre tank.
10-year warranty.
CE marked.

ADVANTAGES

- Total hygiene: no manual contact
- Comfort: automatic soap dispenser
- No waste pump dispenser
- Liquid or foam soap or hydroalcoholic gel

TECHNICAL CHARACTERISTICS

Deck-mounted electronic liquid or foam soap dispenser -

Ref.512531PUK

Technology	Infrared sensor
Supply	230/6V mains supply
Drop Height	76mm
Spout Length	111mm
Volume	1-litre tank
Operation	Electronic

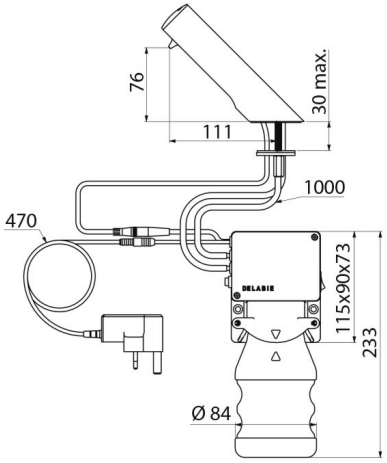

© Delabie