DELABIE

Deck-mounted electronic liquid soap or foam dispenser.



Ref. 512531P

TEMPOMATIC 4 electronic soap dispenser

DESCRIPTION

Deck-mounted electronic liquid soap or foam dispenser. - Ref.512531P

Deck-mounted electronic soap dispenser.
Liquid soap, foam soap or hydroalcoholic gel dispenser.
No manual contact: hands are automatically detected by infrared cell.
Chrome-plated 304 stainless steel spout.
No-waste pump dispenser.
Removable, separate electronic unit and tank for installation beneath the counter top.
Automatic soap dispenser: mains supply with 230/6V transformer.
For vegetable-based liquid soap with a maximum viscosity of 3,000 mPa.s or special foam soap.
Compatible with hydroalcoholic gel.
Spout length: 111 mm.
Supplied with 0.5 litre tank.
10-year warranty.
CE marked.

ADVANTAGES

- Total hygiene: no manual contact
- Comfort: automatic soap dispenser
- No waste pump dispenser
- Liquid or foam soap or hydroalcoholic gel

TECHNICAL CHARACTERISTICS

Deck-mounted electronic liquid soap or foam dispenser. - Ref.512531P

Technology	Infrared sensor
Supply	230/6V mains supply
Drop Height	76mm
Spout Length	111mm
Volume	1-litre tank
Operation	Electronic

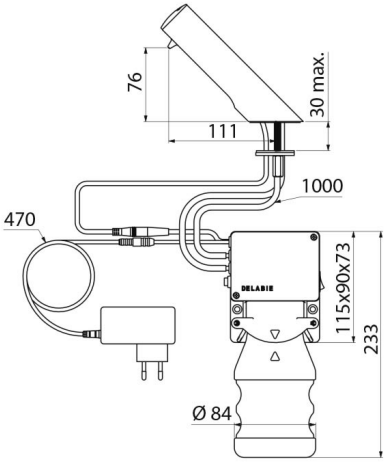

© Delabie