DELABIE

Right angled, shower grab bar (left model) with vertical bar, ¯ 32mm

Ref. 5100GS

UltraSatin polished satin stainless steel, left model

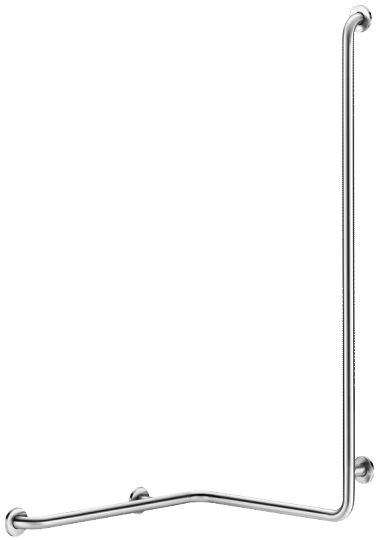

DESCRIPTION

Right angled, shower grab bar (left model) with vertical bar, ¯ 32mm-

Ref.5100GS

Angled, two-wall shower grab bar with vertical bar for PRM, ¯ 32mm. Left model.
Can be used as a support bar and to support the user in an upright position.
Helps and secures entry and movement in the shower.
Can be used as a shower rail by adding a sliding shower head holder and/or soap dish.
Dimensions: 1,265 x 560 x 660mm.
Bacteriostatic 304 stainless steel tube.
Stainless steel with UltraSatin polished satin finish, uniform non-porous surface for easy maintenance and hygiene.
Plate welded to the tube by invisible safety bead weld (process exclusive to "ArN-SecuritÓ).
40mm gap between the bar and the wall: minimal space prevents the forearm passing between the bar and the wall, reducing the risk of fracture in case of loss of balance.
Concealed fixings, secured to wall by a 3-hole plate, 304 stainless steel, ¯ 72mm.
Supplied with stainless steel screws for concrete walls.
Tested to over 200kg. Maximum recommended user weight 135kg.
10-year warranty. CE marked.

ADVANTAGES

- 304 stainless steel: reduces bacterial development
- Tested to over 200kg
- 40mm gap between bar and wall: minimal space
- UltraSatin: smooth surface is easy to clean

TECHNICAL CHARACTERISTICS

Right angled, shower grab bar (left model) with vertical bar, ¯ 32mm-

Ref.5100GS

Height	1,265mm
Length	660mm
Finish	304 stainless steel UltraSatin polished satin
Width	560mm
Width to the wall	40mm
Diameter	Ø 32mm
Destination	For showers

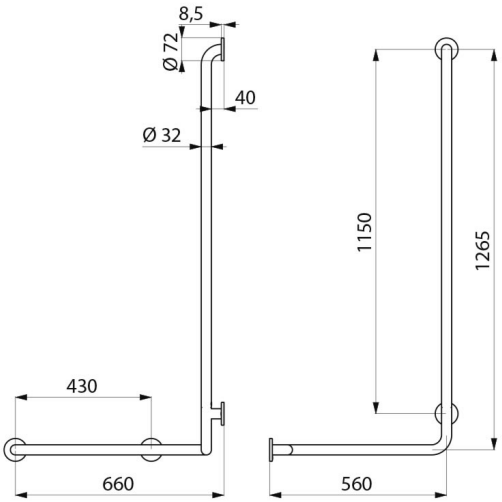

© Delabie