DELABIE

Liquid soap dispenser, 0.5-litre

Ref. 729512

Deck-mounted liquid soap or hydroalcoholic gel dispenser



DESCRIPTION

Liquid soap dispenser, 0.5-litre - Ref.729512

Deck-mounted soap dispenser with curved spout.
Liquid soap or hydroalcoholic gel dispenser.
Model for installing on washbasins.
Vandal-resistant model.
Chrome-plated brass body and push-button.
Non-drip system (waterproof).
Mechanism can be locked via a grub screw.
Top fill (by unscrewing the push-button) or from the lower part (by unscrewing the bottle).
Supplied with a 0.5-litre bottle.
Compatible with hydroalcoholic gel.
Deck-mounted liquid soap dispenser with 10-year warranty.

ADVANTAGES

- Vandal-resistant model
- Suitable for intensive use
- Easy to fill
- Liquid soap or hydroalcoholic gel

TECHNICAL CHARACTERISTICS

Liquid soap dispenser, 0.5-litre - Ref.729512

Height	73 mm
Height	73 mm, beneath the basin 223 mm
Finish	Chrome-plated brass body and push-button
Drop Height	1.2 m tube
Spout Length	120 mm
Volume	0.5-litre tank
Installation:	Deck-mounted

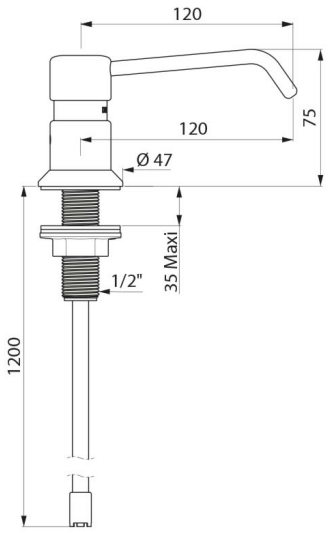

© Delabie