DELABIE

BIOSAFE mechanical basin mixer

Ref. 2620

Single hole mechanical mixer with no spout, H. 95mm L. 110mm

DESCRIPTION

BIOSAFE mechanical basin mixer - Ref.2620

Deck-mounted mechanical basin mixer.
Single hole mechanical mixer H. 95mm L. 110mm.
No spout: BIOSAFE hygienic outlet integrated into the body.
Securitouch thermal insulation prevents burns.
Ø 35mm ceramic cartridge with pre-set maximum temperature limiter.
Thermal shocks are possible without removing the control lever or shutting off the cold water supply.
Body with smooth interior and very low water volume (reduces bacterial development).
Flow rate regulated at 5 lpm.
Solid control lever.
Ergonomic pop-up waste 1 1/4" in brass.
PEX flexibles F3/8" with rotating unions.
Fixing reinforced by two stainless steel rods.
Mechanical mixer ideal for healthcare facilities, retirement and care homes, hospitals and clinics.
Suitable for people with reduced mobility.
Mixer with 10-year warranty.

ADVANTAGES

TECHNICAL CHARACTERISTICS

BIOSAFE mechanical basin mixer - Ref.2620

Technology	BIOSAFE
Height	180 mm
Length	220 mm
Flow rate	5 lpm
Connector	F3/8"
Drop Height	95 mm
Spout Length	110 mm
Temperature limiter	Yes

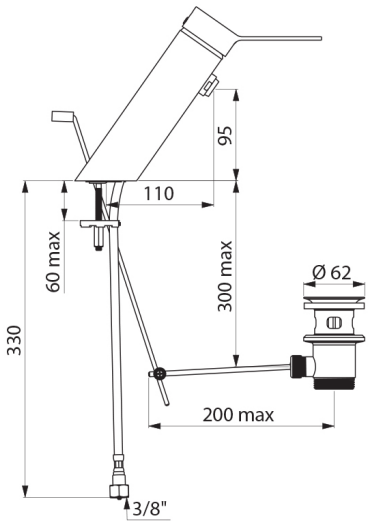

© Delabie