DELABIE

TEMPOFLUX urinal valve

Ref. 778BOX-778700

Time flow 3 seconds



DESCRIPTION

TEMPOFLUX urinal valve - Ref.778BOX-778700

Recessed time flow urinal valve:
Satin finish stainless steel wall plate 145 x 145mm.
Chrome-plated metal push-button.
Waterproof recessing housing:
- Collar with waterproof seal.
- Hydraulic connection to the outside and maintenance from the front.
- Adjusts to all types of installation (rails, solid walls, panels).
- Compatible with wall finishes from 10 - 120mm (while maintaining the minimum recessing depth of 83mm).
- Suitable for standard or "pipe-in-pipe" supply.
- Stopcock and flow rate adjustment, filter and cartridge all integrated and accessible from the front.
- TEMPOFLUX F½" flush valve is compatible with sea water and grey water.
- Supplied in 2 kits: secure system flush without sensitive elements.
Soft-touch operation.
Time flow pre-set at ~3 seconds.
Flow rate pre-set at 0.15 l/sec at 3 bar, can be adjusted up to 0.3 L/sec.
Complies with European standard EN 12541 (class II acoustic level).
Connection with Ø 35mm connection washer (for standard urinals) or ½" brass connection (for urinals supplied by flexible).
For use with neck tube ref. 752430 or 757430.
Suitable for people with reduced mobility.
10-year warranty.

Kit contents:
(778BOX): recessed housing with cover, collar for waterproofing, valve, time flow cartridge, filter and stopcock.
(778700): control plate, collar for waterproofing, valve, time flow cartridge, filter and stopcock.

ADVANTAGES

- ECO time flow 3 seconds
- Soft-touch operation
- Waterproof housing, adjustable and modular

© Delabie

TECHNICAL CHARACTERISTICS

TEMPOFLUX urinal valve - Ref.778BOX-778700

Technology	Time flow
Height	145 mm
Flow rate	0.15 l/sec
Connector	1/2"
Width	145 mm
Depth	83 - 190 mm

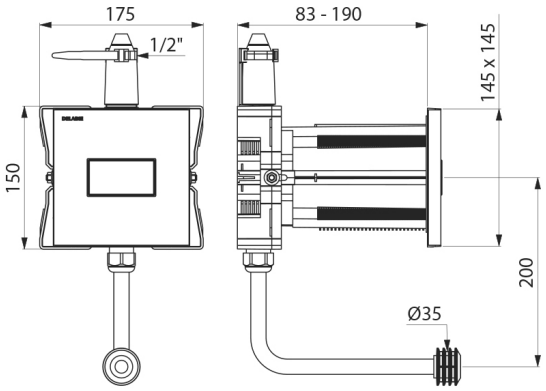

© Delabie